CUSTOM PRO™ WITH E-TRIGGER™ Parts List

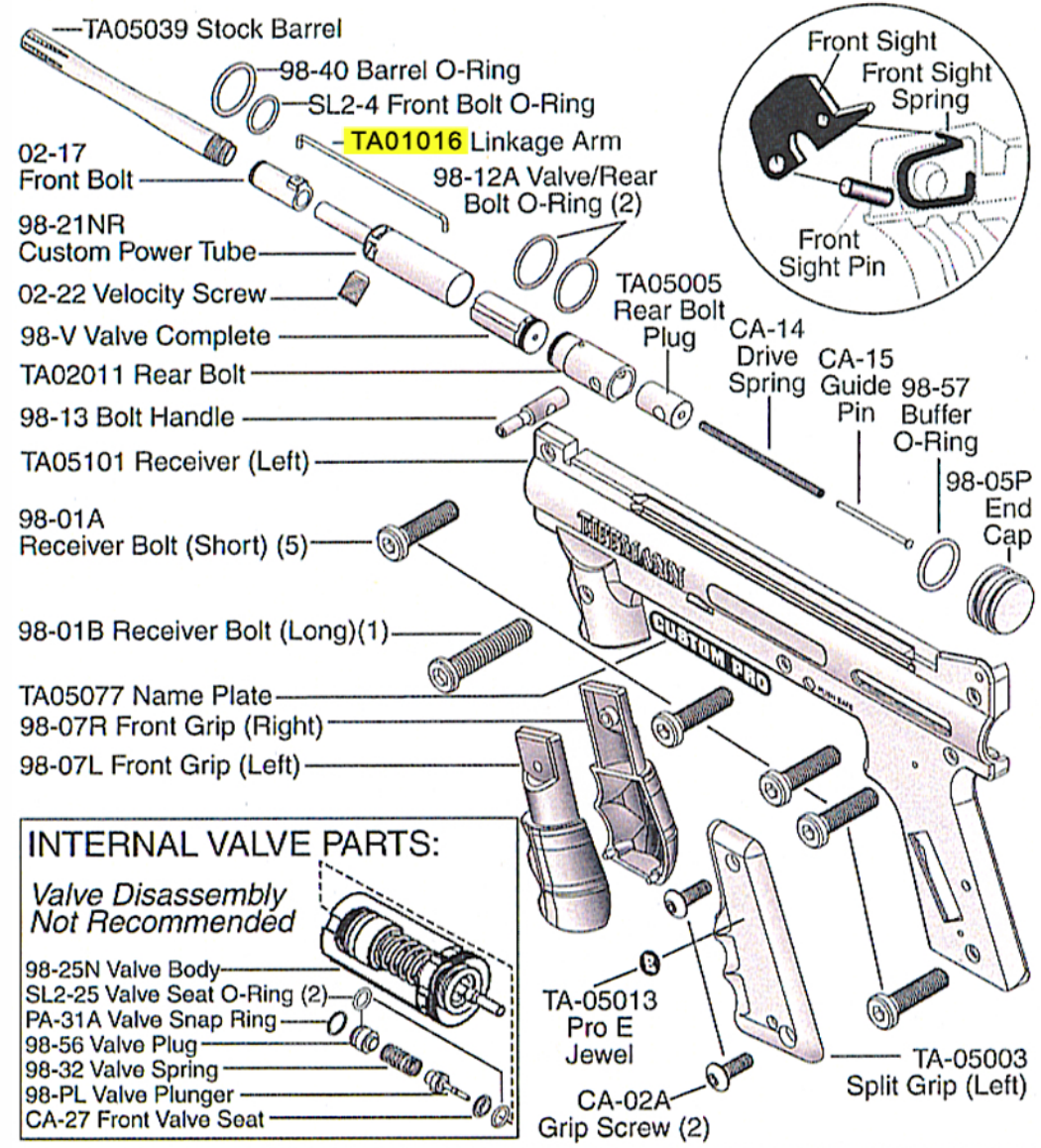

INTERNAL VALVE PARTS:

Valve Disassembly Not Recommended

98-25N Valve Body
SL2-25 Valve Seat O-Ring (2)
PA-31A Valve Snap Ring
98-56 Valve Plug
98-32 Valve Spring
98-PL Valve Plunger
CA-27 Front Valve Seat

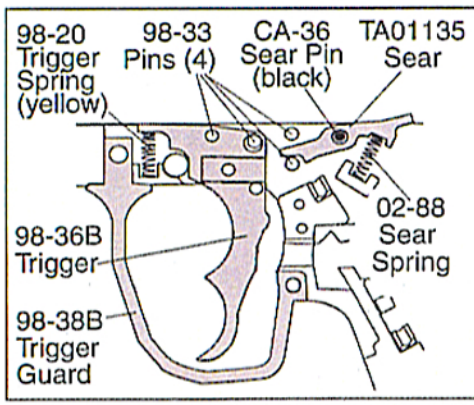

TRIGGER ASSEMBLY

1) Place 4 pins and 1 black sear pin into locations as shown.
2) Then place the trigger and sear onto pins as shown.
3) Insert sear spring as shown.
4) Insert trigger spring (yellow) as shown.

⚠ WARNING

DO NOT FIELD STRIP OR OTHERWISE DISASSEMBLE THIS MARKER WHILE IT IS PRESSURIZED WITH AIR.

TIPPMANN™

Yellow = Diagram Correction
Courtesy of TippmannParts.com

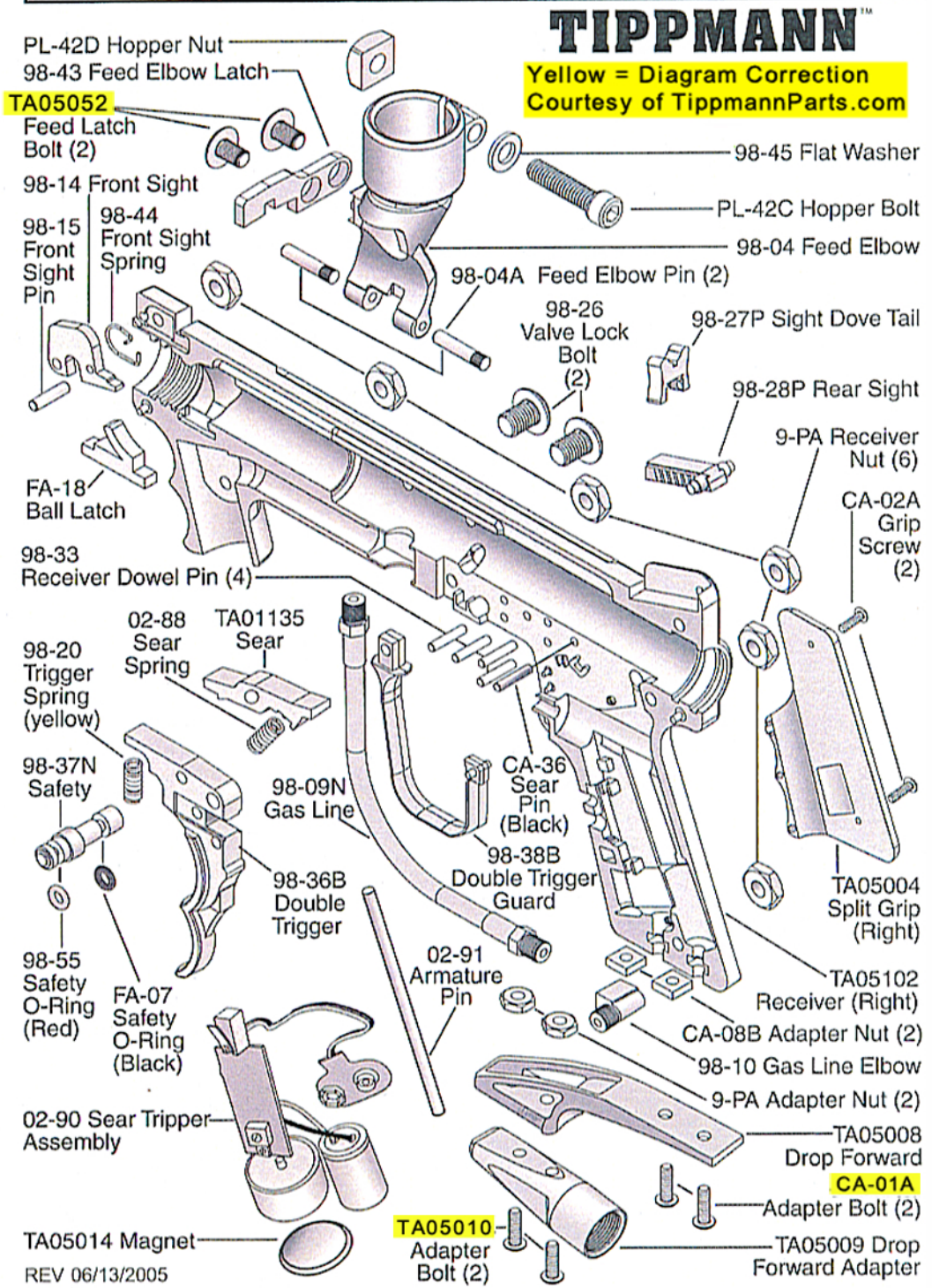

REV 06/13/2005